International Journal of Advanced Biochemistry Research

ISSN Print: 2617-4693
ISSN Online: 2617-4707
NAAS Rating (2025): 5.29
IJABR 2025; SP-9(9): 1860-1873
www.biochemjournal.com
Received: 18-08-2025
Accepted: 19-09-2025

AS Lagad
Department of Farm Machinery and Power Engineering, Dr. Annasaheb Shinde College of Agricultural Engineering and Technology, Mahatma Phule Krishi Vidyapeeth, Rahuri, Maharashtra, India

PP Pawase
Department of Farm Machinery and Power Engineering, Dr. Annasaheb Shinde College of Agricultural Engineering and Technology, Mahatma Phule Krishi Vidyapeeth, Rahuri, Maharashtra, India

AA Walunj
Department of Farm Machinery and Power Engineering, Dr. Annasaheb Shinde College of Agricultural Engineering and Technology, Mahatma Phule Krishi Vidyapeeth, Rahuri, Maharashtra, India

SM Nalawade
Department of Farm Machinery and Power Engineering, Dr. Annasaheb Shinde College of Agricultural Engineering and Technology, Mahatma Phule Krishi Vidyapeeth, Rahuri, Maharashtra, India

PB Kadam
Department of Farm Machinery and Power Engineering, Dr. Annasaheb Shinde College of Agricultural Engineering and Technology, Mahatma Phule Krishi Vidyapeeth, Rahuri, Maharashtra, India

SC Bhangare
AICRP on Farm Implement and Machinery, Dr. Annasaheb Shinde College of Agricultural Engineering and Technology, Mahatma Phule Krishi Vidyapeeth, Rahuri, Maharashtra, India

Corresponding Author:
AS Lagad
Department of Farm Machinery and Power Engineering, Dr. Annasaheb Shinde College of Agricultural Engineering and Technology, Mahatma Phule Krishi Vidyapeeth, Rahuri, Maharashtra, India

Scenario of emerging mechanized cabbage harvesting techniques

AS Lagad, PP Pawase, AA Walunj, SM Nalawade, PB Kadam and SC Bhangare

DOI: https://www.doi.org/10.33545/26174693.2025.v9.i9Sx.5783

Abstract
Cabbage is a major vegetable crop cultivated worldwide, particularly in India, where it constitutes a significant share of vegetable production. Traditional cabbage harvesting relies heavily on manual labor which is time consuming, labor intensive and prone to inconsistencies in product quality. To address these challenges, various mechanical and semi-automated harvesting technologies have been developed globally, including tractor-mounted and self-propelled. This review provides a comprehensive assessment of cabbage harvesting technologies, focusing on the design, working principles and performance metrics of different machines. The paper also analyzes the physio-mechanical properties of cabbage relevant to harvester design, such as stem hardness, head diameter and pulling force. Key innovations in picking, lifting, cutting, conveying and leaf removal mechanisms are discussed in detail. Performance evaluations of various machines reveal significant improvements in harvesting efficiency, field capacity and labor savings, with some models achieving over 90 % efficiency and up to 50 % reduction in labor input. However, the adoption of these technologies in regions like India remains limited due to high costs, lack of suitable local designs and small land holdings. The review highlighted the need for cost-effective, modular harvesters adapted for small-scale farms and identifies opportunities for future research in automation, sensor integration and energy-efficient designs.

Keywords: Cabbage harvesting, tractor mounted, self-propelled, harvesting efficiency

Introduction

Cabbage (*Brassica oleracea* var. *capitata*) is one of the most widely cultivated and economically significant vegetable crops globally, valued for its high nutritional content and versatility in both fresh and processed forms. Its adaptability to diverse agro-climatic zones and relatively short growing season has encouraged its widespread cultivation across regions such as Uttar Pradesh, West Bengal, Maharashtra and Karnataka (Pandey *et al.,* 2018) [23]. Global cabbage output increased by 1.56 % million metric tons between 2019 and 2021 as a result of mechanization advancements in harvesting techniques (MI, 2024). Although cabbage is high in minerals and vitamin C, its production in Bangladesh and other countries is still below the global average because of unbalanced fertilization and poor seed quality (FAOSTAT, 2012; BBS, 2012). Rich in phenols and flavonoids, cabbage varieties like Red, Savoy, Green and Chinese have potent anti- inflammatory and antioxidant properties that may help fight against disorders linked to oxidative stress (Rokayya *et al.,* 2013) [39]. Cabbages are grown in a variety of climates by producers, with Asia, Europe, and the USA being the main producing regions. China produces almost half of the world's cabbage, making it the largest producer of cabbage.

Major Indian states cultivate large amounts of cabbage, and the production of the crop is greatly influenced by the variety, maturity period, and spacing. With a suggested spacing of 60×45 cm for mid-season harvests and 60×60 cm for late crops, West Bengal cultivators such as Copenhagen Market, Pusa Synthetic, and September Early reach maturity in 75-110 days, producing 28-40 $t.ha^{-1}$. Early and mid-season cultivars like Golden Acre, Pusa Mukta, and Early Drum Head, which are spaced 45 x 45 cm or 60 x 45 cm apart and mature in 60 to 90 days, yield 25 to 30 $t.ha^{-1}$ in Odisha. Bihar prefers Pride of India, Golden Acre, and Late Large Drum Head, which reach 20-28 t/ha and mature in 70-105 days. In Gujarat, Pusa Synthetic and Pusa Drumhead dominate, requiring 80-120 days with spacing of 60×45 cm to

75×60 cm, and yields 21-30 t.ha^{-1} (Thamburaj and Singh, 2001) [23]. Karnataka grows Pusa Mukta and September Early, which mature in 80-110 days and yield 25-35 t.ha^{-1} when spaced 60x45 cm or 60x60 cm apart (Tamta *et al.,* Anonymous). Early Drum Head and Pusa Mukta in Maharashtra mature in 70-100 days, spaced 45-45 cm apart or 60-45 cm apart, and produce 20-30 t.ha^{-1}.

With yields of 35-46 t.ha^{-1}, Punjab prefers Pusa Synthetic and Pusa Drumhead, which mature in 80-120 days and are spaced at 60×45 cm or 75×60 cm (Tamta *et al.,* 2014; Swarup, 2012). September Early, Pusa Drumhead, and K-1 are grown in the mountainous state of Himachal Pradesh. They mature in 95-120 days, with a spacing of 60×45 cm or 75×60 cm, and yield 40-54 t.ha^{-1} (Singh, 2001) [23]. Plant spacing has a major impact on cabbage development and productivity, according to studies. While broader spacing (60×60 cm or 70×50 cm) improves individual head size and makes automation easier, closer spacing (45×45 cm or 60×40 cm) boosts yield because of higher plant density (Moniruzzaman, 2011; Červenski, 2018; Alekseevich, 2014; Yadav, 2023) [33, 34, 40]. While highly dense planting delayed maturation and decreased head quality, K- K Cross and Golden Acre were the cultivars with the highest yields, performing best at closer spacing.

Despite its economic importance, cabbage harvesting in India and many other developing countries continues to rely heavily on manual labor using tools like sickles. This method is labor intensive, time consuming and often results in inconsistent harvesting quality and increased postharvest losses due to physical damage to the heads. The primary producer of cabbage, China, continues to harvest the cabbage by hand, which raises labor costs, workloads and production demands (Tong *et al.,* 2023; Yang *et al.,* 2021) [41, 42]. In response to labor shortages and the growing need for efficiency, various mechanized harvesting technologies have been developed worldwide. These include tractor-mounted systems, trailer-supported harvesters and advanced self-propelled machines with integrated picking, lifting, cutting, conveying and leaf-removal mechanisms (Chagnon *et al.,* 2004; Du *et al.,* 2016; Didamony *et al.,* 2020) [6, 13, 9]. These systems have demonstrated significant benefits, including enhanced productivity, reduced crop damage and minimized dependence on manual labor. For instance, some self-propelled harvesters have achieved field efficiencies exceeding 90 % while reducing labor requirements by up to 50 % (Dixit *et al.,* 2022; Shahmihaizan *et al.,* 2023) [10, 22]. In recent years, China, Japan, and Korea have placed more emphasis on developing machinery for harvesting cabbages (Song *et al.,* 2000; Gao *et al.,* 2015; Lee *et al.,* 2020; Kiraga *et al.,* 2021; Swe *et al.,* 2021) [44, 45, 46, 47, 48]. However, the adoption of such technologies remains limited in regions like India, primarily due to high equipment costs, lack of availability of locally suited designs, small landholdings and limited awareness or training among farmers.

Therefore, there is a pressing need to review and evaluate the current developments in cabbage harvesting machinery with a focus on improving accessibility, efficiency and adaptability for small holder farming systems. This review paper aims to provide a comprehensive overview of cabbage harvesting technologies, examining different harvesting mechanisms, machine components and performance metrics. Additionally, it discussed the physio-mechanical properties of cabbage relevant to harvester design and discusses future directions for research and innovation in mechanized cabbage harvesting.

Maturity Indices of Cabbage

The reviews on cabbage maturity indices consistently emphasize the importance of specific physical characteristics to determine the optimal harvest time, ensuring high quality and extended shelf life.

According to Champa *et al.* (2007) [7], cabbages harvested between 75-80 days after planting (DAP) achieved optimal characteristics like head weight (1.2-1.5 kg), firmness (8 kg) and moisture content (91 %), which are essential for both fresh and processed markets. Similarly, Gil *et al.* (2012) [21], emphasize that cabbage should be firm and compact at harvest, with early varieties weighing at least 350 g and others reaching 500 g or more. Both reviews stress that delayed harvesting risks splitting and increased disease, especially under wet conditions. Manasa *et al.* (2017) [20] demonstrated that wider spacing leads to larger head size (~1.15 kg), influencing marketability and harvest timing. Jaipaul *et al.* (2014) [15] further discussed that labor shortages and inconsistent harvest schedules reduce uniform maturity and overall yield quality in Indian production systems. The reviews also connect the physiological aspects of cabbage maturity.

Physio-mechanical Properties of Cabbage

The reviews on the physical properties of cabbage discussed various key measurements essential for optimizing cabbage harvesting and postharvest handling, with a focus on plant size, shape and structural features that influence the design of harvesting equipment. In addition to the firmness and surface texture of the cabbage heads, physical features like head size, stem length and root diameter, as well as other properties like weight and density, are crucial for designing harvesting equipment (Swe *et al*., 2022) [48].

Pandey *et al.* (2018) [23] measured feeder leaf diameters, horizontal and vertical pulling forces and plant weight, which are necessary for designing efficient lifting and handling mechanisms. Similarly, Du *et al.* (2016) [13] evaluated stem length, plant height and head diameter, using these measurements to define the width of picking components and spacing between conveying belts, as well as the height of the cutting mechanism. Sharan *et al.* (2003) [26] contributed detailed data on cabbage head dimensions, including the longitudinal diameter, where 74 % of cabbage heads had a diameter between 120 and 140 mm. This information helps in sorting and grading for storage and mechanical processing. Yuvraj (2020) [28] provided additional measurements of plant diameter, height and head dimensions, which are key parameters for the development of cutting mechanisms tailored to different cabbage varieties. Balkaya *et al.* (2005) [4] added a broader perspective by exploring the morphological diversity of Turkish white head cabbage, revealing significant variation in traits like head size, shape and weight. This diversity is important for breeding programs aimed at improving cabbage varieties for specific harvesting and processing requirements.

Collectively, these studies emphasize the importance of physical characteristics such as head diameter, plant height, stem length and leaf dimensions, which are critical for designing mechanical harvesters, optimizing postharvest handling and standardizing cabbage quality for storage and processing. The integration of these data points ensures that

harvesting equipment can be tailored to handle the variety of cabbage types and sizes grown in different regions.

Estimation of Cutting Force for Cutting Cabbage Stem

The reviews on cutting force for cabbage harvesting collectively provide a comprehensive understanding of the mechanical parameters, blade configurations and operational strategies required for efficient cutting.

Persson (1987) [24] established foundational knowledge on the mechanics of cutting, showing that serrated blades maintain sharpness longer and reduce peak cutting force due to enhanced tangential force. This insight is supported by Li *et al.* (2013) [39] and Didamony *et al.* (2020) [9], who also found that serrated blades combined with sliding cutting modes at higher speeds significantly lowered the cutting force in cabbage stems. Li *et al.* (2013) [39] and Sarkar *et al.* (2023) [25] both emphasized that cutting closer to the cabbage base requires less force. Sarkar *et al.* (2023) [25] quantified this, identifying 34.5 Nm torque and 230 N force as optimal at the base with 590 rpm speed. These findings align with Wang *et al.* (2022) [27], who demonstrated that cutting force and energy decrease with increased sliding angles and optimal cutting gaps. Zhang *et al.* (2023) [41] employed the Discrete Element Method (DEM) to simulate cabbage root cutting and identified optimal mechanical parameters (e.g., 88.62 N minimum resistance force), which complements experimental studies by validating them through physics based simulations. Similarly, Dongdong *et al.* (2015) [11] used multifactor tests to reduce splitting failure (SF) and cutting forces, showing that a 40° sliding angle and 300 mm.min^{-1} cutting speed minimized SF and cutting stress.

Liming *et al.* (2023) and Didamony *et al.* (2020) [9] extended this knowledge to field applications. Liming's study identified 11° inclination angle and 216 rpm speed as optimal for a self-propelled harvester with a 92.81 % cutting qualification rate, while Didamony optimized disc blades at 900 rpm and 35° angle, achieving minimal energy consumption (0.18 kWh.t^{-1}). Across the studies, higher cutting speeds and optimized angles consistently resulted in lower cutting forces, reduced torque requirements and minimal crop damage, forming a unified technical basis for the design of low energy, high precision mechanical cabbage harvesters.

Table 1: Different blades used in cabbage harvester and cutting force required to cut cabbage stem

Author	Blade Type	Cutting Speed/Velocity	Cutting Angle /Position	Cutting Force/Torque
Persson (1987) [24]	Serrated preferred	Higher speeds reduce peak force	Serration increases tangitial force	Lower peak force with serration
Li *et al.,* (2013) [39]	Serrated	150 mm.min^{-1}	5 mm below head base	123.9 N (top), 224.3 N (bottom)
Didamony *et al.,* (2020) [9]	Serrated disc	900 rpm	35 disc angle	0.18 kWh.t^{-1} energy
Dongdong *et al.,* (2015) [11]	-	300 rpm	40 sliding angle	Reduced splitting failure
Wang *et al.,* (2022) [27]	-	-	30 slidding, 9.1 oblique	7.43×10 4Pa stress, 0.28 mJ.mm^2 energy
Zhang *et al.,* (2023) [41]	-	186.91 rpm	12.26 pitch angle	88.62 N max resistance force
Liming *et al.,* (2023)	Serrated disc	216 rpm	11 inclination	92.81% success rate, 0.12 ha.h^{-1} productivity
Sarkar *et al.,* (2023) [25]	Counter rotating discs	590 rpm	Cutting position at 0 cm	230 N, 34.5 Nm, optimal for small harvesters

Harvesting Techniques of Cabbage

Cabbage harvesting techniques range from traditional manual methods to advanced mechanized systems. Manual harvesting, still dominant in India and other developing nations, involves cutting heads with knives or sickles, which is labor-intensive, time-consuming, and associated with high risks of musculoskeletal disorders due to prolonged bending and repetitive tasks (Jain *et al.,* 2018; Hachiya *et al.,* 2004) [36, 14]. To overcome these limitations, various mechanized approaches have been developed globally. Tractor-operated systems, such as those introduced by Chagnon *et al.* (2004) [6] and Mitsuru Hachiya *et al.* (2004) [14], utilized conveyors and cutting blades to improve efficiency and reduce labor input. More advanced designs, including self-propelled harvesters developed by Du *et al.* (2016) [13] and Dixit *et al.* (2022) [10], incorporated picking shovels, conveyor belts, and dual-disk saws to enhance cutting precision and minimize crop damage. Kanamitsu (1996) [32] demonstrated the effectiveness of a tractor-mounted harvester in Japan, though manual retrimming remained necessary. Further refinements, such as hydraulic drives and optimized cutting mechanisms (Didamony *et al.,* 2020; Zhang *et al.,* 2022; Shahmihaizan *et al.,* 2023) [9, 27, 22], have significantly reduced labor requirements by up to 50 % in some cases while ensuring high-quality produce. Despite these advancements, adoption in countries like India remains limited due to high costs, lack of locally suitable designs, and predominance of small landholdings (Shahmihaizan *et al.,* 2023) [22].

Table 2: Harvesting techniques of cabbage

Technique	Features	Efficiency / Field Capacity	Limitations	References
Manual Harvesting	Heads cut using sickles or knives; requires bending and repetitive motion; no machinery needed	~28.8 man- hours.ha^{-1} (India)	Very labor- intensive; risk of musculoskeletal disorders; inconsistent quality	Hachiya *et al.,* 2004; Jain *et al.,* 2018; Jaipaul *et al.,* 2014 [14, 36, 15]
Tractor-Operated	Tractor-mounted or trailer-supported systems with conveyors and cutting blades	0.06 to 0.07 ha.h^{-1}; 50% labor savings	Requires retrimming; not feasible for small farms due to cost and field size	Chagnon *et al.,* 2004; Kanamitsu, 1996; Hachiya *et al.,* 2004; Shahmihaizan *et al.*, 2023 [6, 32, 14, 22]
Self-Propelled	Equipped with crawler chassis, hydraulic drives, shovels, conveyors, dual-disk saws, and leaf separators	0.063 ha.h^{-1}; 90-92% efficiency; up to 12.56 t.h-1 productivity	High cost; complex maintenance; limited adoption in India	Du *et al.,* 2016; Du *et al.,* 2019; Didamony *et al.,* 2020; Dixit *et al.,* 2022; Zhang *et al*., 2022; Cao *et al*., 2022; Alatyrev *et al*., 2019 [13, 12, 9, 10, 41, 29, 2]

Manual Harvesting of Cabbage

Manual harvesting remains the predominant method for cabbage collection in many regions, particularly in India and other developing countries. This approach involves the use of hand tools such as knives or sickles to cut the cabbage heads from the plant base, followed by manual collection and transportation. Although it is a traditional and widely practiced method. Manual harvesting typically involves workers bending down to cut each head individually, which is physically demanding and can lead to fatigue and musculoskeletal injuries, especially during extended periods of work (Hachiya *et al.,* 2004) [14]. Additionally, the uniformity and quality of harvested cabbage can vary depending on the skill and experience of the laborers. Improper handling during cutting or transport can result in physical damage to the cabbage heads, reducing their market value and shelf life.

Fig 1: Manual method of cabbage harvesting

In the Indian context, cabbage harvesting is still performed almost entirely by hand, with little to no use of mechanical aids. According to the review, there are currently no commercially available cabbage harvesting machines suited for Indian field conditions and no large-scale studies have been conducted on local mechanization of this process. Small and marginal farmers, who constitute the majority of cabbage growers in India, often cannot afford large or imported harvesting equipment (Shahmihaizan *et al.,* 2023) [9]. As a result, they rely on low cost labor and basic tools to complete the harvest. Musculoskeletal disorders were highly prevalent among manual harvesting farmers in Rajasthan, mainly affecting the lower back, fingers, shoulders, and wrists. Awkward postures, repetitive tasks, and poorly designed tools were key contributors, indicating the urgent need for ergonomic interventions and improved tool design (Jain, 2018) [36].

Mechanical Harvesting of Cabbage

The mechanical methods of cabbage harvesting have evolved significantly, with various innovations designed to increase efficiency, reduce labor costs and minimize damage to the crop. Both tractor-operated and self-propelled systems have been developed, each incorporating unique features aimed at improving the overall harvesting process. These methods generally focus on optimizing the cutting mechanisms, conveying systems and operational flexibility.

In Japan, a redesigned Chinese cabbage harvester was developed with a rotating disk cutter, feed belts and biaxial screw augers. Although it produced minor head damage, the walking-type prototype demonstrated continuous harvesting. A tractor-mounted model with a height control and elevator increased productivity, harvesting 2 $A.h^{-1}$ with two operators. Despite its effectiveness, manual retrimming was still required, resulting in a labor cost of roughly 30 man-hours per 10 a, comparable to manual harvesting (Kanamitsu, 1996) [32].

In the early stages, Chagnon *et al.* (2004) [6] introduced a tractor-mounted harvesting system featuring a picker and conveyor system that aimed at reducing labor costs while maintaining the integrity of the cabbage heads. The system utilized a tractor platform with attached conveyors to move harvested cabbage heads, laying the foundation for more sophisticated mechanized systems. Similarly, Hachiya *et al.* (2004) [14] tested a trailer-supported mechanized system, which used simple equipment like belt and roller conveyors attached to a tractor and trailer for large scale cabbage harvesting. This approach marked the first step toward semi-automation in cabbage harvesting, offering a foundation for future designs.

Moving towards more advanced systems, Du *et al.* (2016) [13] introduced a self-propelled cabbage harvester with a crawler chassis, which included multiple components such as a picking mechanism, lifting system, dual-disk saws and a hydraulic system. This design increased the maneuverability and efficiency of harvester, particularly in smaller fields or fields with irregular terrain. Similarly, Zhou *et al.* (2017) [31] developed a pulling-out test bed with a double-helix pulling- out mechanism and root-cutting system, focusing on optimizing the cutting and pulling processes to improve efficiency and minimize damage to the roots.

Further advancements in harvesting methods came from Alatyrev *et al.* (2018, 2019) [2], who developed a combine harvester with a conveyor cutter system, designed to separate cabbage heads from their stumps and transport them to the next stage. This design ensured minimal loss of leaves during the harvesting process, allowing for higher quality produce. The non-damaging technology developed by Alatyrev *et al.* (2020) [3] improved the quality of harvested cabbage by incorporating flexible trays and adjustable conveyors to soften impacts and reduce mechanical damage to the heads.

Cao *et al.* (2020) [29] designed a Chinese cabbage harvester that integrated a drawing shovel, root-cutting mechanism, hydraulic system and flat-belt conveyors. This design was focused on reducing labor and increasing harvesting speed while maintaining the quality of cabbage heads. Mohamed Ibrahim El Didamony *et al.* (2020) [9] highlighted the importance of simple, durable designs by constructing a harvester with an iron-frame structure, making the machine easy to operate and maintain, especially in smaller scale operations. The emphasis on ease of use, durability, and cutting precision was also echoed in the prototypes developed by Mail *et al.* (2021) [19] and Dixit *et al.* (2022) [10]. Both systems were designed with user friendly features, including adjustable cutting mechanisms and conveyor belt systems, to ensure minimal crop damage while operating efficiently in field conditions. Similarly, Zhang *et al.* (2022) [27] focused on the mechanical aspects of the harvester, optimizing the cutting and conveying speeds to achieve a high rate of harvested cabbage, researched the importance of speed and precision in improving harvest quality. Cao *et al.* (2022) [29] and Shahmihaizan *et al.* (2023) [22] further refined

the mechanical designs of cabbage harvesters by introducing innovations like front-mounted systems with integrated DC motors and hydraulic systems, which powered the cutting, conveying and root-cutting mechanisms. These systems were designed for flexibility, operational ease and reducing labor costs. Notably, Shahmihaizan *et al.* (2023) [22] achieved a 60.2 % field efficiency and reduced labor by 50 %, demonstrating the potential of mechanical harvesters to significantly reduce manual labor and operational costs.

Collectively, the evolution of mechanical cabbage harvesters reflects a continuous drive for improvement in cutting precision, operational efficiency and automation. With innovations in cutting mechanisms, hydraulic systems, conveyor designs and user-friendly features, these machines are becoming increasingly efficient in large-scale cabbage production. Through careful optimization of speed, energy consumption and mechanical components, researchers are helping to design systems that not only save time and labor but also reduce damage to the cabbage heads, ensuring higher quality produce and cost-effective operations.

Tractor operated cabbage harvester

The evolution of tractor-operated cabbage harvesters reflects a significant effort to improve harvesting efficiency, reduce labor and protect the crop from mechanical damage, while also integrating technologies that support ease of use and operational flexibility.

Chagnon *et al.* (2004) [6] introduced a simple yet effective single-row tractor-mounted cabbage harvester, consisting of a picker, inclined conveyor and horizontal conveyor belt. The system utilized a second tractor to haul a trailer for collecting harvested cabbage, effectively mechanizing the harvesting process and reducing labor costs. This laid the foundation for mechanized harvesting systems that were easy to implement using existing farm equipment.

Fig 2: Harvesting by hand with a harvesting aid (Chagnon *et al.* (2004)) [4]

Building on this approach, Hachiya *et al.* (2004) [14] further innovated with a trailer-supported system, which integrated the tractor and trailer with simple harvesting components like a belt conveyor and roller conveyor. This design capitalized on the fact that many cabbage growers already owned tractors and trailers, making the system both cost-effective and efficient for mechanization, addressing the need for low-cost solutions in the field.

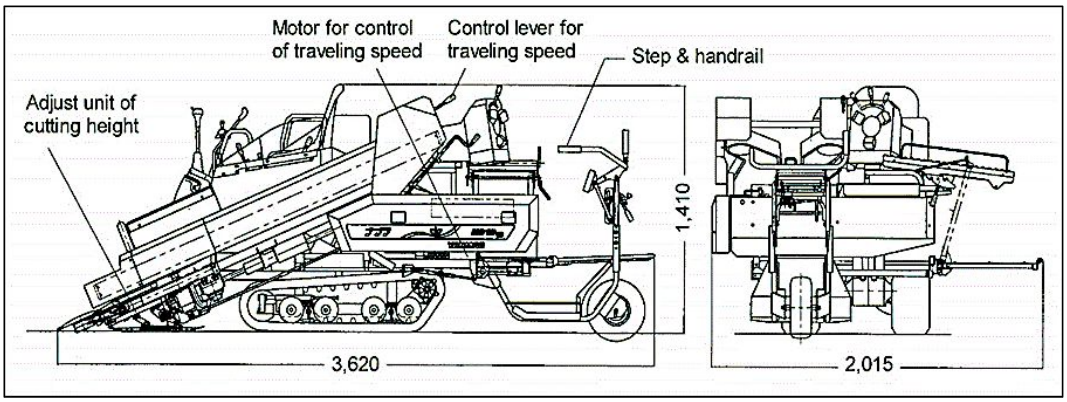

Fig.3: Cabbage harvester improved for one-man operation

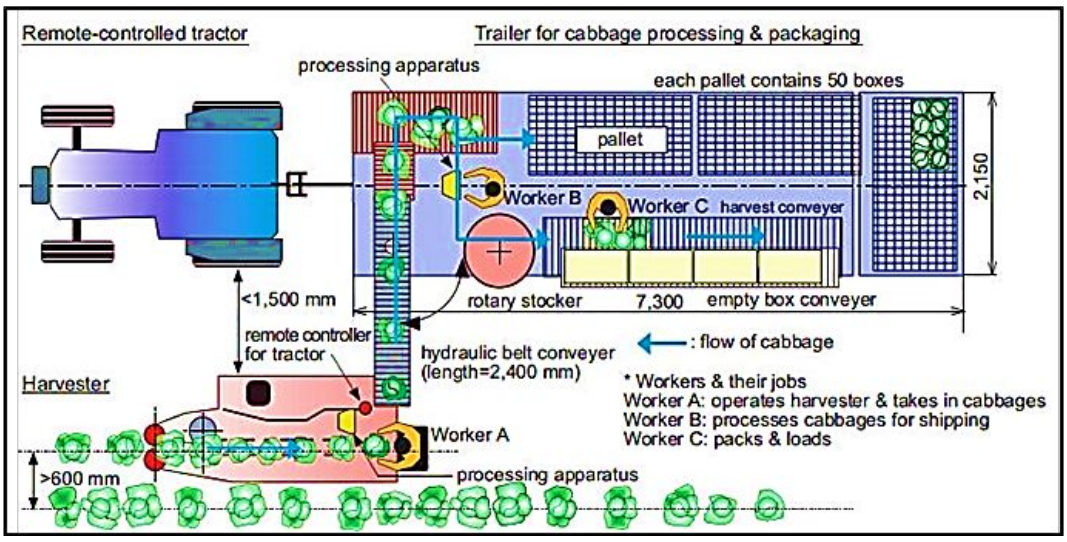

Fig 4: Schematic diagram of trailor-supported mechanized harvesting system based on harvester improved for one-man operation

While these systems focused on basic mechanization, Alatyrev *et al.* (2018) [1] and Alatyrev *et al.* (2019) [2] advanced the technology by emphasizing the reduction of mechanical damage during harvesting. Their combine harvester designs incorporated adaptive technological schemes that focused on bulk or delicate packing of cabbage heads, ensuring that heads were carefully handled during transport. Alatyrev *et al.* (2020) [3] took this further by utilizing mathematical modeling to determine key parameters that would enhance the gentle shipment of cabbage heads, such as optimizing tray stiffness and flexible flooring height, which minimized damage.

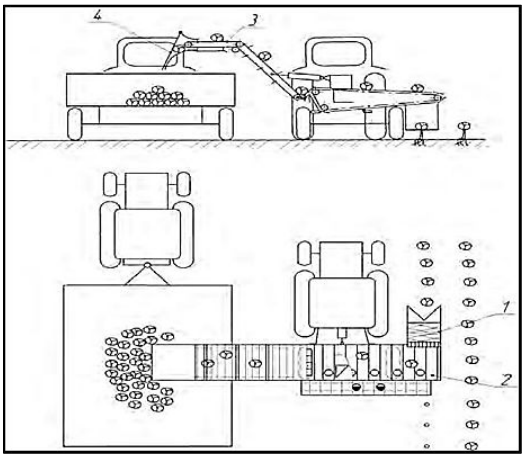

Fig 5: Cabbage harvesting with a combine harvester under the scheme of bulk shipment of heads in the bed of the all-purpose vehicle (Alatyrev *et al.* (2018)) [1]

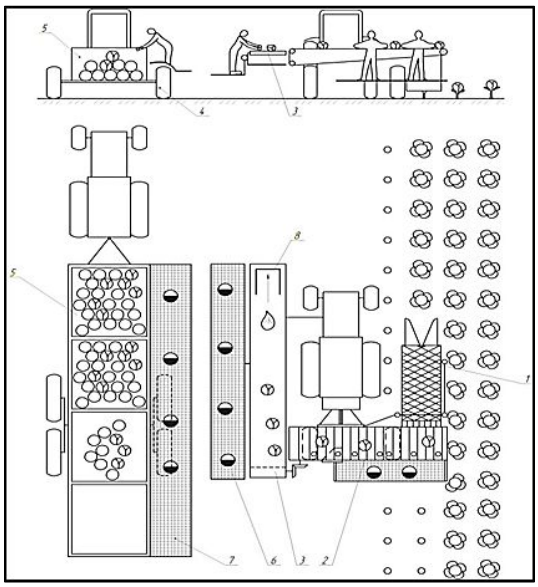

Fig 6: Scheme of cabbage machine harvesting by careful stacking of heads in containers on a low frame trailer: 1 - cutting apparatus, 2 - conveyor-cutter, 3 - longitudinal conveyor, 4- accompanying low-frame trailer, 5 - interchangeable containers, 6 and 7 - specially equipped sites, 8 - fence. (Alatyrev *et al.* (2019)) [2]

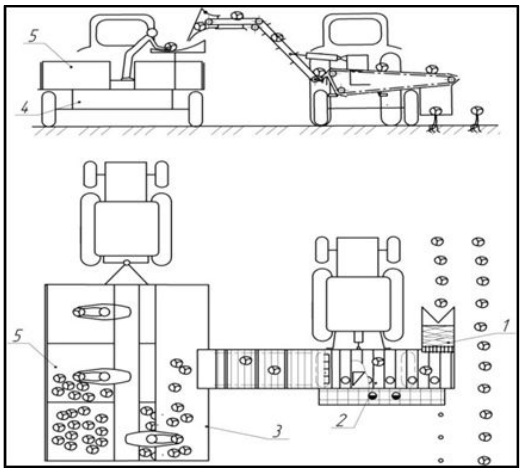

Fig 7: New method to harvest cabbage: 1 - cutter bar; 2 - conveyor cutter; 3 - flexible flooring; 4 - vehicle; 5 - removable containers. (Alatyrev *et al.* (2020)) [3]

Cao *et al.* (2020) [12] shifted focus slightly by introducing a Chinese cabbage harvester equipped with a hydraulic drive system capable of fully mechanizing the extraction, cutting, conveying and loading processes. This system was versatile, accommodating both single and double-ridge operations, enhancing productivity and flexibility while maintaining gentle handling of the crop. Similarly, Mail *et al.* (2021) [19] developed a side attached harvester prototype with an adjustable cutting mechanism and electric motor power sourced from the vehicle. This design demonstrated the ability to drastically reduce the labor required for cabbage harvesting, meeting the mechanization needs of Malaysia's agricultural sector. By offering increased efficiency, it marked an important breakthrough in mechanized cabbage harvesting, saving both time and labor.

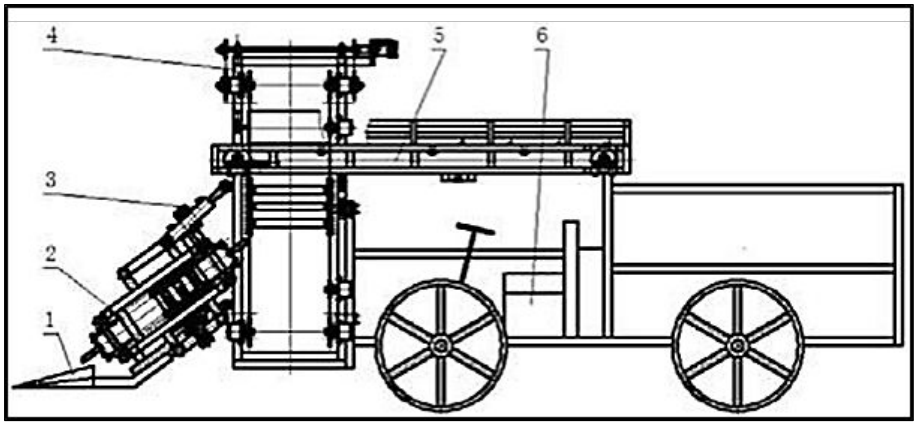

1. Drawing shovel, 2. Conveying root-cutting component, 3.Hydraulic cylinders, 4. Lifting component, 5. Flat belt conveying component, 6.Locomotive.

Fig 8: The overall structure design of Chinese cabbage harvester. (Cao *et al.* (2020) [12]

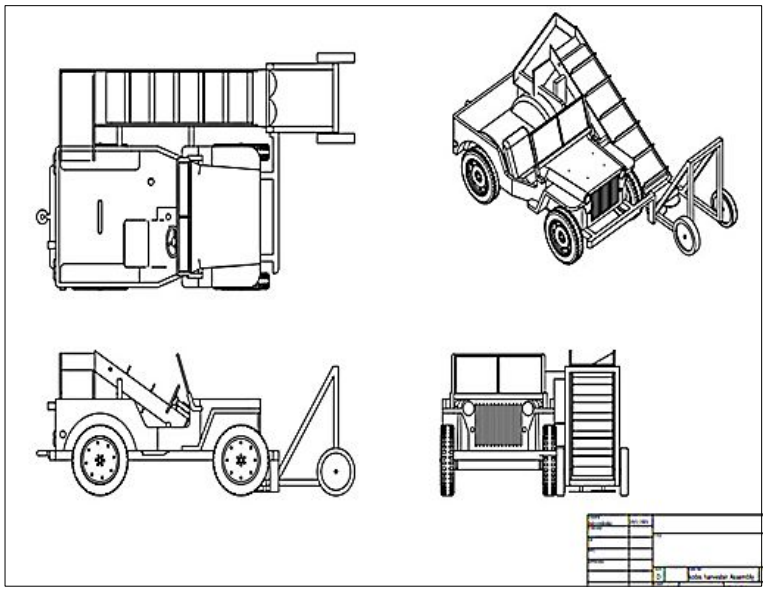

Fig 9: Schematic drawing for a cabbage harvester prototype (Mail *et al.* (2021) [19]

The collective progress in tractor-operated cabbage harvesters demonstrates a clear trend toward enhancing the efficiency, gentleness and cost-effectiveness of the systems. Through the development of improved cutting mechanisms, conveyance systems and innovative unloading methods, these harvesters have become more versatile and user-friendly. The integration of existing machinery, such as tractors and trailers, with advanced components has enabled greater mechanization across different agricultural settings, reducing labor and increasing productivity. These innovations provided an ongoing effort to developed a flexible, high-performance systems for large-scale cabbage harvesting that can minimize crop damage, reduce operational costs and boost overall efficiency.

Self-propelled cabbage harvester

The development of self-propelled cabbage harvesters has evolved through multiple innovations, each addressing different challenges to improve efficiency, reduce labor and minimize cabbage damage. Du *et al.* (2016) introduced a self-propelled harvester that used picking shovels, transverse belts for transport, rotating disk saws for root cutting and a rubber roller for removing leaves. This design focused on optimizing harvesting processes and minimizing cabbage damage, laying the groundwork for future improvements.

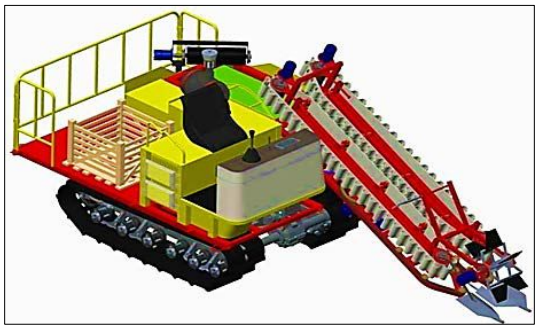

Fig 10: 3D model of self-propelled cabbage harvester (Du *et al.* (2016) [13]

Lee *et al.* (2018) [16] expanded on this design by optimizing the power transmission system. Their work emphasized reducing stress and fatigue in key components through kinematic analysis, ensuring more reliable operation and less cabbage damage during transport. This step forward highlighted the need for efficient mechanical systems in self-propelled harvesters. Du *et al.* (2019) [12] advanced the design with a compact model for small, separate fields. Their harvester featured a crawler chassis, picking mechanism and leaf separator, designed for single row operation. This model aimed to serve smaller scale fields while still minimizing cabbage damage and enhancing harvesting efficiency.

Fig 11: Photo of compact self-propelled cabbage harvester (Du *et al.* (2019) [12]

Didamony *et al.* (2020) [9] conducted field tests on a prototype in Egypt, focusing on cutter disc performance. They found that serrated cutter discs operating at 900 rpm with a 35° tilt angle provided optimal performance, yielding a high productivity of 12.56 tons per hour with minimal cabbage damage. Their findings refined the cutting parameters, contributing to the overall efficiency of the harvesting process.

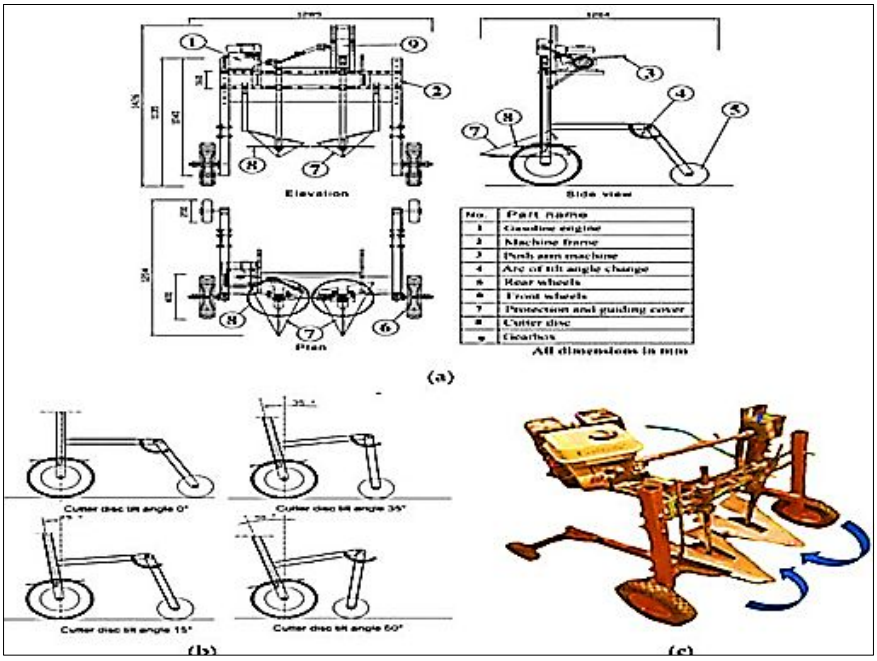

Fig 12: (a) Cabbage harvesting prototype. (b) The tilt angles of the cutter disc. (c) A photograph of cabbage harvesting prototype. (Didamony *et al.* (2020)) [9]

Dixit *et al.* (2022) [10] developed a self-propelled harvester by modifying an existing power weeder. Their harvester achieved a field efficiency of 91.97 % for cabbage, with minimal head damage (0.15 %) and high productivity, while also reducing labor requirements. This modification demonstrated the potential for adapting existing machinery to improve harvesting efficiency.

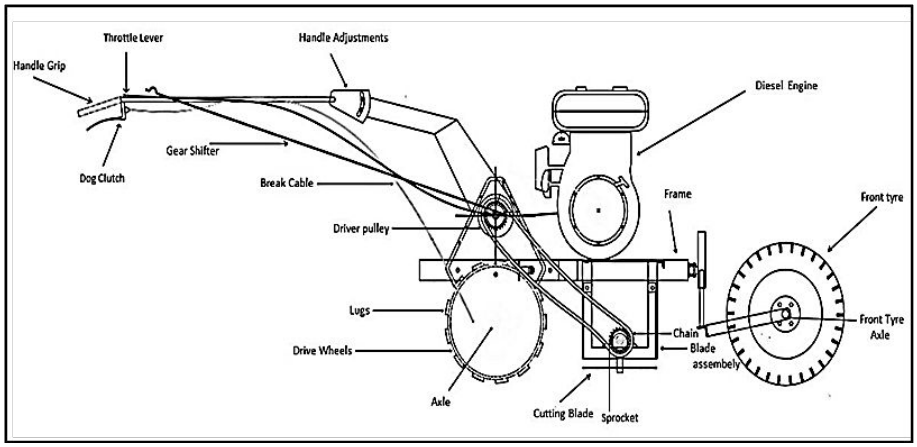

Fig 13: Conceptual view of self-propelled Cabbage/ cauliflower harvester (Dixit *et al.* (2022))

Zhang *et al.* (2022) [27] introduced a dual power crawler chassis to enhance stability and mobility, especially on uneven terrain. Their research optimized operational parameters like cutter head speed and conveyor belt speed, achieving a high qualification rate of 96.3 %. This design focused on improving reliability and ensuring minimal cabbage damage during harvest.

Fig 14: The structure of the whole machine (Zhang *et al.* (2022) [27]

Lastly, Cao *et al*. (2022) [29] explored the best cutting parameters for Chinese cabbage, finding that an 80 tooth disc cutter at 400 rpm and a feed speed of 1.0 $m.s^{-1}$ produced the best cutting quality. Their findings contributed to optimizing the cutting mechanism for cabbage harvesters, reducing damage and improving overall performance.

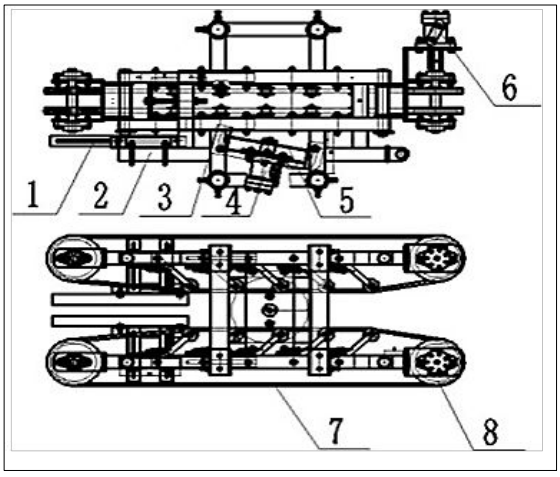

Fig 15: 1 Extraction shovel; 2 frame; 3 tension guide wheel; 4 DC motor; 5 cutting blade; 6 pulley drive hydraulic motor; 7 belt; 8 pulley (Cao *et al.* (2022) [29]

Together, these studies represent a continuous progression in self-propelled cabbage harvester technology. The innovations in cutting mechanisms, power transmission, field efficiency and mobility have all contributed to the goal of creating more efficient, cost effective and labor saving harvesting machines. Each study built upon the previous one, refining key components and contributing to the overall advancement of cabbage harvesting machinery.

Picking mechanism

The design of the picking mechanism for self-propelled cabbage harvesters has undergone significant innovation to improve efficiency and reduce crop damage. One of the main challenges addressed in early studies was optimizing the picking mechanism. In Chagnon *et al.* (2004) [6], experiments were conducted to evaluate the efficiency of different picker designs, with various belt speeds ranging from 35 to 52 $m.min^{-1}$. The optimal speed was found to be 37 $m.min^{-1}$ and the picker was designed to be 350 cm long and 88 cm wide, lifting cabbages at a 25° angle. The stainless steel blade, rotating at 600 rpm, efficiently picked the cabbages, but the picker design itself remained a work in progress. Du *et al.* (2016) [13] further refined the picking mechanism by utilizing a pair of shovels and a reel to enhance the harvesting process. The cabbage plants are guided into the lifting mechanism by the shovels and the rotating reel helps to push and balance the plants. This design ensured that the cabbage plants were securely collected as the harvester moved forward, reducing the chance of damage during the picking process.

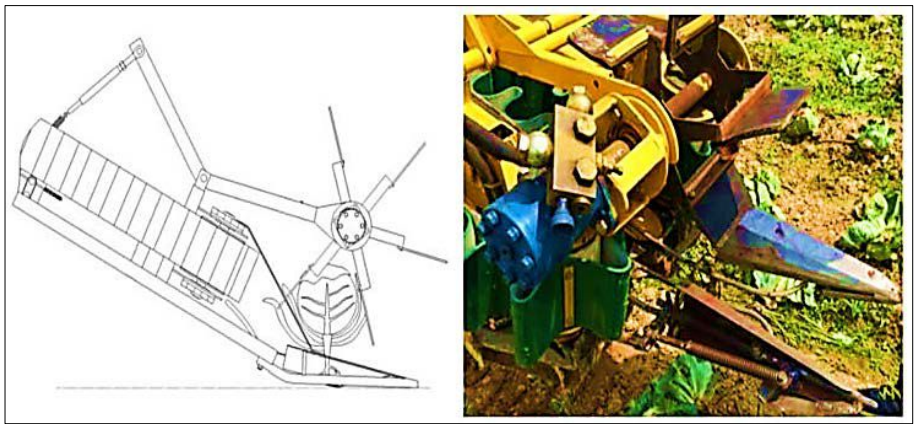

(a) (b)

Fig 16: (a) Structure of picking mechanism; (b) Flexible picking shovels (Du *et al.* (2016) [13]

Du *et al.* (2019) [12] introduced an even more advanced version of this system, incorporating a flexible frame made of spring steel for the shovels. This flexibility allowed the shovels to adapt to uneven soil surfaces, improving their efficiency on a variety of terrains. Additionally, a hydraulic motor powered a reel with six rubber fingers, which worked to align and guide the cabbages into the lifting mechanism, further minimizing damage and ensuring a smooth harvest.

The evolution of the picking mechanism in these studies discovered the importance of flexibility and adaptability in harvesting technology. By combining flexible shovels, balanced reels and optimal belt speeds, these advancements paved the way for more efficient and damage free cabbage harvesting, contributing to the continuous improvement of self-propelled harvesters.

Lifting mechanism

The lifting mechanism plays a crucial role in self-propelled cabbage harvesters by transporting the cabbage plants from the picking mechanism to the leaf separator while also holding the plants in place during root cutting. Du *et al.* (2016) [13] designed a lifting mechanism using a pair of transverse belts with flexible circular grooves on their surfaces. The rubber belts, each approximately 2 meters long and 20 cm wide, were inclined at a 25° angle to the ground. These belts effectively moved the cabbage plants toward the leaf separator while supporting the cutting process.

Du *et al.* (2019) [12] further refined the lifting mechanism by incorporating a pair of serration type lifting chains in addition to the transverse belts. The combination of these two elements, the rubber belts and serration type chains, ensured more stable and efficient transport of the cabbage plants, helping to prevent damage during the transition from the picking mechanism to the leaf separator. The transverse belts played a vital role in conveying the cabbages while the serration type lifting chains assisted in securing them as the roots were cut by the harvesting device.

These advancements found the importance of effective lifting mechanisms in cabbage harvesters. The use of flexible belts and serration type chains improves the handling of the cabbage plants, contributing to a smoother and more damage free harvesting process.

Cutting mechanism

The cutting mechanisms in self-propelled cabbage harvesters have evolved significantly to enhance precision and efficiency. Early designs, like those by Hachiya *et al.* (2004) [14], used counter rotating disks and rotating blades to cut the cabbage stems and outer leaves. This system was later improved for single person operation, offering better control over cutting height and speed. Du *et al.* (2016) [13] introduced dual disk saws, rotating at 400 rpm, for precise root cutting. Their design, with staggered disks, prevented incomplete cuts. This was refined further in 2019 by placing the disks between lifting belts and serration type chains, improving cutting efficiency. Alatyrev *et al.* (2019) [2] demonstrated the importance of aligning the cutting unit with the cabbage plants and adapting to field relief, ensuring effective cuts. Meanwhile, Didamony *et al.* (2020) [9] used smooth and serrated disks made from sheet metal, with

adjustable speeds facilitated by a gearbox, making the system adaptable to varying conditions.

Other designs, such as those by Mail *et al.* (2021) [19] and Dixit *et al.* (2022) [10], focused on optimizing blade speed and durability. These systems incorporated high speed circular blades (1800 rpm) and robust frames made from high carbon steel, ensuring reliable performance in tough harvesting environments. Overall, the cutting mechanisms have evolved from basic blades to more advanced, adaptable systems that improve cutting precision, reduce damage, and enhance harvesting efficiency.

Conveying mechanism

The conveying system plays a crucial role in efficiently transporting harvested cabbages from the cutting mechanism to the processing or storage area. Hachiya *et al.* (2004) [14] designed a system where a hydraulic conveyor on a trailer, controlled by the operator, carried the cabbage to the trailer. This system allowed the operator to load the cabbage onto the conveyor easily. The system also included roller conveyors on the trailer for packaging and loading, which increased labor efficiency by reducing the need for interruptions during the harvest. This system led to a 50 % reduction in time compared to conventional manual harvesting and significantly improved labor efficiency, with less physical strain on workers.

Alatyrev *et al.* (2019) [2] focused on the integration of conveyors with cutting mechanisms. They described a system where a belt conveyor, combined with a clamping conveyor, transported the cut cabbage heads through a leaf separator before moving them to the next processing stage. This design aimed to ensure that the cabbage heads were moved smoothly without falling off the conveyor. Mail *et al.* (2021) [19] introduced a conveyor system with partitions designed to handle varying cabbage sizes and weights. The system, made from lightweight aluminum, ensured that the cabbages remained secure during transport. The partition heights were carefully designed to hold the cabbages in place as they moved through the harvester, preventing loss and ensuring smooth operation.

In summary, the conveying mechanisms in cabbage harvesters are designed to optimize transportation efficiency and reduce physical strain on workers. The integration of conveyors with cutting and leaf separating systems ensures that the cabbages are securely moved from the cutting area to the storage or processing unit. Designs like those from Hachiya *et al.* (2004) [14], Alatyrev *et al.* (2019) [2] and Mail *et al.* (2021) focus on reducing labor, minimizing cabbage loss and improving the overall effectiveness of the harvesting process.

Leaf removal mechanism

The leaf removal mechanisms in self-propelled cabbage harvesters have evolved to enhance efficiency and reduce manual labor. Early designs, such as the one by Chagnon *et al.* (2004) [6], utilized an inclined conveyor belt set at a 29° angle, moving upwards at 50 m/min, to separate excess leaves from the cabbage before conveying.

Fig 17: Prototype of the leaf separator (Chagnon *et al.* (2004) [6]

Subsequent advancements by Du *et al*. (2016) [13] introduced a rubber roller inclined at 40-60°, operating at 300, 400 rpm, combined with a conveyor moving at 0.5 to 2 $m.s^{-1}$. This configuration effectively removed wrapper leaves. Further refinements in 2019 optimized the roller speed to approximately 400 rpm and the conveyor speed to 1.5 $m.s^{-1}$, enhancing leaf separation efficiency.

Fig 18: Leaf separator (Du *et al*. (2016) [13]

Alatyrev *et al.* (2019) [2] presented a system where workers inspect cabbages on a conveyor cutter. Sick and unripe heads are separated and those with long stalks are inserted into holes in the conveyor plates. These are then recut by a passive knife, effectively removing rosette leaves. These developments discovered a progression from simple mechanical systems to more integrated and efficient leaf removal mechanisms, reducing manual labor and improving the quality of harvested cabbage.

Table 3: Overview of available mechanisms of cabbage harvester

Mechanism	Description	References
Pulling Mechanism	Double-helix pullers with root-cutters; spring-steel frames; hydraulic reels with rubber fingers.	Du *et al.,* 2016; Du *et al.,* 2019; Zhou *et al.,* 2017 [13, 12, 27]
Lifting Mechanism	Transverse rubber belts; serration-type lifting chains; belt-chain combinations for stable lifting.	Du *et al.,* 2016; Du *et al.,* 2019 [13, 12]
Cutting Mechanism	Rotating disk cutters; dual disk saws (400 rpm); serrated discs (900 rpm); circular blades (1800 rpm); DEM- optimized disc blades.	Kanamitsu, 1996; Du *et al.,* 2016; Didamony *et al.,* 2020; Dixit *et al.,* 2022; Zhang *et al.,* 2023; Sarkar *et al.,* 2023 [32, 13, 9, 10, 41, 25]
Conveying Mechanism	Inclined and hydraulic conveyors; clamping conveyors with leaf separators; partitioned aluminum conveyors; dual power crawler conveyors.	Chagnon *et al.,* 2004; Hachiya *et al.,* 2004; Alatyrev *et al.,* 2019; Mail *et al.,* 2021; Zhang *et al.,* 2022 [6, 14, 2, 19, 41]

Performance of Cabbage Harvester

Performance evaluation of cabbage harvesters has been extensively studied across various designs, with key metrics including field capacity, efficiency, product damage, cutting accuracy and labor savings. Hachiya *et al.* (2004) [14] tested a trailer supported harvester system.

Du *et al.* (2016) [13] developed a self-propelled harvester featuring a picking mechanism and leaf separator. Their tests showed a picking rate of nearly 90 %, delivery rate of 100 %, accurate cutting rate ranging from 57.8 % to 75.0 % and a leaf separating rate between 68.0 % and 80.0 %. Overall harvesting losses were maintained below 6.7 %, indicating good operational reliability at speeds of 0.2 to 0.4 m.s^{-1}. Du *et al.* (2019) [12] conducted field tests in July and December 2015, showed the prototype harvester performed well, with 97.4 % picking rate and 96.2 % qualified cutting rate. However, 20.2 % of cabbages had insufficient cutting, leaving wrapper leaves attached. This required manual trimming on the platform. Mean harvest loss was 6.3 %, mainly from picking loss and cutting damage.

Dixit *et al.* (2022) [10] presented a modified self-propelled harvester derived from a power weeder, achieving a field capacity of 0.063 ha.h^{-1} and an exceptionally high field efficiency of 91.97 %, with negligible cabbage head damage (0.16 %). This system could harvest approximately 0.5 hectares per day, reducing manual labor requirements by up to 15 workers per day. Didamony *et al.* (2020) [9] evaluated a self-propelled cabbage harvesting prototype in Egypt and found it capable of delivering an actual productivity of 12.56 tons per hour with only 3.8 % cabbage damage. The system required 2.28 kW of power and consumed 0.18 kWh per ton harvested, resulting in a low operating cost of $3.66 per hour. This study highlighted the effectiveness of using serrated cutting discs at 900 rpm and a forward speed of 1.5 km.h^{-1} for optimal performance. Actual productivity increased with cutter disc tilt angle up to 35°, then declined beyond that. For serrated discs at 900 rpm and 1.5 km.h^{-1}, productivity rose from 9.02 t.h^{-1} at 0° to 12.56 t.h^{-1} at 35°, then fell to 8.63 t.h^{-1} at 50°. Smooth edge discs showed lower overall values, peaking at 9.04 t.h^{-1} at 35°. Optimal tilt angle of 35° and serrated edges gave highest productivity.

A tractor-mounted harvester by Shahmihaizan *et al.* (2023) [22] demonstrated an effective field capacity of 0.065 ha.h^{-1} and a field efficiency of 60.2 %. Notably, this machine achieved approximately 50 % labor savings compared to manual harvesting, reducing the requirement from 28.8 to 14.4 man-hours per hectare. Zhang *et al.* (2022) [27] introduced a compact self-propelled harvester with a dual power crawler chassis and an integrated leaf-stripping mechanism. Performance tests at optimal parameters advancing speed of 1.1 km.h^{-1}, cutter head speed of 395 rpm, and conveyor belt speed of 205 rpm yielded a qualifying harvest rate of 96.3 %, with minimal product damage and uniform cut quality. Zhou *et al.* (2017) [31] further optimized a pulling out test bed for cabbages and achieved a pulling out success rate above 95 % by adjusting the screw pole angle (15°), spacing (50 to 70 mm) and rotation speed (180 rpm). These results emphasize the role of mechanical configuration and operational tuning in maximizing harvesting performance while minimizing crop damage and labor input.

Table 4: Performance evaluation of existing cabbage harvester

Author	Harvester Type	Features	Findings
Kanamitsu and Yamamoto (1996) [32]	Tractor- mounted (Japan)	Rotating disk cutter, Biaxial screw augers, feed belts	Harvested 2 a.h^{-1} with 2 operators; minor head damage; manual retrimming needed.
Chagnon *et al.* (2004) [6]	Tractor- mounted	Picker, inclined and horizontal conveyors, trailer-supported system	Reduced labor cost; improved efficiency while maintaining crop quality.
Hachiya *et al.* (2004) [14]	Trailer- supported	Belt and roller conveyors with tractor- trailer integration	50 % faster than manual; reduced worker fatigue; moderate damage; Travelling speed: 8.81 to 9.50 cm.s-1; Amount of time required: 18.8 to 19.2 h.person.10 a-1; Field efficiency: 76.2 to 84.2 %
Du *et al.* (2016) [13]	Self- propelled (China)	Picking shovels, dual- disk saws, conveyor belts, rubber rollers	picking rate: 90 %; harvest loss: <6.7 %; good operational reliability; accurate cutting rate: 57.8 % to 75.0 %, leaf separating rate: 68.0 % and

			80.0 %, speeds: 0.2 to 0.4 m.s-1.
Du *et al*. (2019) [12]	Compact self-propelled	Crawler chassis, picking mechanism, leaf separator	Picking rate: 97.4 %; cutting rate: 96.2 %; harvest loss mainly from picking loss and cutting damage: 6.3 %, Operating speed: 0 to 1.57 m.s-1 Cutting speed: 400 to 500 rpm, Leaf separating speed: 300 to 400 rpm
Didamony et al. (2020) [9]	Self- propelled (Egypt)	Serrated cutter discs at 900 rpm, 35° tilt angle	Productivity: 12.56 t.h-1; damage: 3.8 %; energy use: 0.18 kWh.t-1; Serrated cutting disc speed: 900 rpm; forward speed: 1.5 km.h-1.
Dixit *et al*. (2022) [10]	Modified self- propelled	Power weeder-based, circular blades (1800 rpm), robust frame	Effective field capacity: 0.063 ha.h-1; field efficiency: 91.97 %; head damage: 0.16 %; saved ~15 workers per day
Zhang *et al*. (2022) [27]	Compact self-propelled	Dual power crawler chassis; optimized cutter and conveyor speeds	Qualified harvest rate: 96.3 %; minimal damage; reliable operation; Optimal speed: 1.1 km.h-1 at cutting speed of 395 rpm; conveyor belt speed: 205 rpm.
Shahmihaiz an *et al*. (2023) [22]	Tractor-mounted prototype	Front-mounted, hydraulic drive, adjustable conveyors	Engine power: 31 hp; Area: 1 ha; Harvesting speed: 0.54 km.hr-1; Average harvesting time: 15.3 hr.ha-1; EFC:
			0.065 ha.h-1; TFC: 0.108 ha.h-1; field efficiency: 60.2 %; ~50 % labor reduction

Conclusion

The mechanization of cabbage harvesting has progressed significantly over the past two decades, driven by the need to reduce labor dependency, improve operational efficiency and minimize crop damage. This review has explored a wide range of harvesting systems including manual, tractor-operated and self-propelled designs highlighted key innovations in cutting mechanisms, lifting and conveying systems and leaf separation techniques. Studies consistently show that optimized cutting angles, serrated blades and controlled cutting speeds contribute to lower energy consumption and reduced mechanical damage. Self-propelled harvesters with integrated systems for picking, cutting and leaf stripping have demonstrated high field efficiency (up to 92 %), increased productivity (up to 12.56 tons per hour) and significant labor savings (up to 50 %).

Despite these advancements, challenges remain in adapting these technologies for small scale farmers, especially in countries like India, where farm holdings are fragmented and capital investment is limited. The lack of localized development and testing of cabbage harvesters remains a barrier to adoption. Future research should focus on low cost, modular designs that are compatible with small farm machinery, as well as automation technologies like vision guided picking and precision control systems. Overall, the development of efficient, affordable and adaptable cabbage harvesting machines holds strong potential to transform the productivity and sustainability of cabbage cultivation globally.

References

1. Alatyrev SS, Alatyrev AS, Misihin PV, Pushkarenko NN, Mikhailova OV, Loskutov YV, *et al*. Operating staff optimization in case of headed cabbages mechanical harvesting under adaptive technologies. In: International scientific and practical conference "Agro-SMART-Smart solutions for agriculture" (Agro-SMART 2018). Atlantis Press; 2018. p. 17-23.
2. Alatyrev SS, Kruchinkina IS, Alatyrev AS, Vasilyev AO, Andreev RV. Technology and parameters of cabbage machine harvesting by careful stacking of heads in containers. IOP Conf Ser Earth Environ Sci. 2019;433(1):012005.
3. Alatyrev S, Yunusov G, Kruchinkina I, Alatyrev A. Development of technology and means for machine harvesting of head cabbage in the non-damaging mode. IOP Conf Ser Earth Environ Sci. 2020;604(1):012020.
4. Balkaya A, Yanmaz R, Apaydin A, Kar H. Morphological characterisation of white head cabbage (*Brassica oleracea* var. *capitata* subvar. *alba*) genotypes in Turkey. N Z J Crop Hortic Sci. 2005;33(4):333-41.
5. Cao L, Miao S, Gu L. Design and cutting test analysis of Chinese cabbage harvester. J Phys Conf Ser. 2022;2185(1):012005.
6. Chagnon R, Eng P, Charles MT, Fortin S, Boutin J, Lemay I, *et al*. Development of a cabbage harvester. In: 2004 American Society of Agricultural and Biological Engineers Annual Meeting; 2004 Aug 1-4. p. 1-12.
7. Champa WAH, Palipane KB, Weerakkody WAP, Fernando MD. Maturity indices for harvesting of cabbage (*Brassica oleracea* L.) variety green coronet. [Conference paper]. 2007.
8. Dhengle RP, Bhosale AM. Effect of plant growth regulators on yield of cabbage (*Brassica oleracea* var. *capitata*). Int J Plant Sci. 2008;3(2):376-8.
9. Didamony MI, Shal AM. Fabrication and evaluation of a cabbage harvester prototype. Agriculture. 2020;10(12):1-11.
10. Dixit J, Rawat NJ. Development and evaluation of self-propelled cabbage/cauliflower harvester. NASS J Agric Sci. 2022;4(1):56-63.
11. Dongdong D, Jun W, Shanshan Q. Analysis and test of splitting failure in the cutting process of cabbage root. Int J Agric Biol Eng. 2015;8(4):27-34.
12. Du D, Wang J, Xie L, Deng F. Design and field test of a new compact self-propelled cabbage harvester. Trans ASABE. 2019;62(5):1243-50.
13. Du D, Xie L, Wang J, Deng F. Development and tests of a self-propelled cabbage harvester in China. In: 2016 ASABE Annual International Meeting. Am Soc Agric Biol Eng; 2016. p. 1.
14. Hachiya M, Amano T, Yamagata M, Kojima M. Development and utilization of a new mechanized cabbage harvesting system for large fields. Jpn Agric Res Q. 2004;38(2):97-103.
15. Jaipaul S, Choudhary AK, Negi MS, Kumar A. Scientific cultivation of cabbage (*Brassica oleracea* L. var. *capitata*). Adv Veg Agron. 2014; p. 79-86.
16. Lee YS, Jang BE, Kim YJ, Chung SO, Choi YS, Ji KB. Structural analysis of the transportation and the power transmission parts for design of a self-propelled and small-sized Chinese cabbage harvester. In: 2018 ASABE Annual International Meeting. Am Soc Agric Biol Eng; 2018. p. 1.
17. Li X, Wang F, Guo W, Gong Z, Zhang J. Influencing factor analysis of cabbage root cutting force based on

orthogonal test. Trans Chin Soc Agric Eng. 2013;29(10):42-8.
18. Zhou L, Zeng Y, Niu K, Yuan Y, Bai S, Chen K. Analysis on root cutting mechanism of self-propelled Chinese cabbage harvester and optimisation of device parameters. Inmateh Agric Eng. 2023;71(3):1-10.
19. Mail MF, Azmon H, Jusoh MSM, Nordin MN, Rani RA, Idris MZ. Design and development of a low land cabbage harvester prototype. Int J Agric For Plantation. 2021;11:71-7.
20. Manasa S, Mukunda L, Sadarunnisa S, Rajasekharam T. Response of red cabbage (*Brassica oleracea* L. var. *capitata* f. *rubra*) to different levels of plant and row spacing. Int J Curr Microbiol Appl Sci. 2017;6(11):1684-9.
21. Gil MI, Tudela JA, Martínez-Sánchez A, Luna MC. Harvest maturity indicators of leafy vegetables. Stewart Postharvest Rev. 2012;1(1):1-6.
22. Mohd Shahmihaizan MJ, Mohd Nadzim N, Hafidha A, Mohd Fazly M. Performance evaluation of a lowland cabbage harvester prototype. Food Res. 2023;7(2):90-3.
23. Pandey T, Singh V. Physical properties of cabbage for mechanical harvesting. Int J Creative Res Thoughts. 20XX;X(X):1-6.
24. Persson S. Mechanics of cutting plant material. St. Joseph (MI): Am Soc Agric Eng; 1987. 340 p.
25. Sarkar P, Raheman H. Development of a laboratory setup simulating cabbage harvesting mechanism and optimization of torque requirement for harvesting cabbage. Span J Agric Res. 2023;21(1):e0203.
26. Sharan G, Rawale K. Physical characteristics of some vegetables grown in Ahmedabad region. Ahmedabad: Indian Institute of Management, Research and Publication Department; 2003. p. 1-20.
27. Wang W, Wang S, Zhang J, Lv X, Yi Z. Experiment and research on cutting mechanical properties of little cabbage. Appl Sci. 2022;12(4):2060-8.
28. Yuvraj S. Development of power tiller attachment for cabbage harvesting [M.Tech thesis]. Raipur: Indira Gandhi Krishi Vishwavidyalaya; 2020. p. 1-120.
29. Zhang J, Cao G, Jin Y, Tong W, Zhao Y, Song Z. Parameter optimization and testing of a self-propelled combine cabbage harvester. Agriculture. 2022;12(10):1610-22.
30. Zhang J, Wang J, Du D, Long S, Wang Y, Han C, *et al*. Optimization and validation of root-cutting device for Chinese cabbage harvester based on discrete element method. Comput Electron Agric. 2023;214:108314.
31. Zhou C, Luan F, Fang X, Chen H. Design of cabbage pulling-out test bed and parameter optimization test. Chem Eng Trans. 2017;62:1267-72.
32. Kanamitsu M, Yamamoto K. Development of Chinese cabbage harvester. [Conference paper]. 1996. p. 1-10.
33. Moniruzzaman M. Effect of plant spacings on the performance of hybrid cabbage (*Brassica oleracea* var. *capitata*) varieties. Bangladesh J Agric Res. 2011;36(3):495-506.
34. Červenski J, Danojević D, Medić-Pap S, Savić A. Late cabbage planting density. Selekcija i Semenarstvo. 2018;24(2):26-31.
35. Turbin VA, Sokolov AS, Kosterna E, Rosa R. Effect of plant density on the growth, development and yield of Brussels sprouts (*Brassica oleracea* L. var. *gemmifera* L.). Acta Agrobot. 2014;67(4):1-8.
36. Jain R, Meena ML, Dangayach GS, Bhardwaj AK. Risk factors for musculoskeletal disorders in manual harvesting farmers of Rajasthan. Ind Health. 2018;56(3):241-8.
37. Ali M, Haque MA, Rahman MA, Moon JM, Kim KJ, Chung SO, *et al*. Mechanization trends of cabbage harvesting practices: A review. [Review article]. 2022; p. 1-20.
38. Bose SK, Howlader P, Khan ABMMM, Mallik MR, Kayosar MN. Growth and yield of cabbage as influenced by different sources of plant nutrients. [Journal article]. 2014; p. 1-8.
39. Rokayya S, Li CJ, Zhao Y, Li Y, Sun CH. Cabbage (*Brassica oleracea* L. var. *capitata*) phytochemicals with antioxidant and anti-inflammatory potential. Asian Pac J Cancer Prev. 2013;14(11):6657-62.
40. Yadav S, Kumar S, Verma RS, Anushruti, Kumar L, Sonkar VK, *et al*. Effect of different varieties and spacing on growth and yield of cabbage (*Brassica oleracea* L. var. *capitata*). Ecol Environ Conserv. 2023;29(3s):1-7.
41. Tong W, Zhang J, Cao G, Song Z, Ning X. Design and experiment of a low-loss harvesting test platform for cabbage. Agriculture. 2023;13(6):1204-15.
42. Yang LM, Fang ZY, Zhang YY, Zhuang M, Lv HH, Wang Y, *et al*. Research progress on cabbage genetic breeding during 'The Thirteenth Five-year Plan' in China. China Vegetables. 2021;1(1):15-21. Chinese.
43. Swe KM, Chowdhury M, Reza MN, Ali M, Kiraga S, Islam S, *et al*. Physical and strength properties of radish and Chinese cabbage. Precis Agric. 2022;4(2):98-108.
44. Song KS, Hwang H, Hong JT. Automatic cabbage feeding, piling, and unloading system for tractor implemented Chinese cabbage harvester. IFAC Proc Vol. 2000;33(29):259-63.
45. Gao L, Bai Y, Liu X. Evaluation of precision agriculture technologies for soil health improvement. Comput Electron Agric. 2015;114:103-10.
46. Lee YS, Ali M, Islam MN, Rasool K, Jang BE, Kabir MSN, *et al*. Theoretical analysis of bending stresses to design a sprocket for transportation part of a Chinese cabbage collector. J Biosyst Eng. 2020;45(2):85-93.
47. Kiraga S, Reza MN, Ali M, Chowdhury M, Gulandaz MA, Islam MN, *et al*. Potential of impact-based weight sensing of individual Chinese cabbage for real-time yield monitoring. IOP Conf Ser Earth Environ Sci. 2021;924(1):012015.
48. Swe KM, Islam MN, Chowdhury M, Ali M, Wing S, Jun HJ, *et al*. Theoretical analysis of power requirement of a four-row tractor-mounted Chinese cabbage collector. J Biosyst Eng. 2021;46(2):139-50.